Three ϕ Precast Transformer Pad (750-1000 kVA)

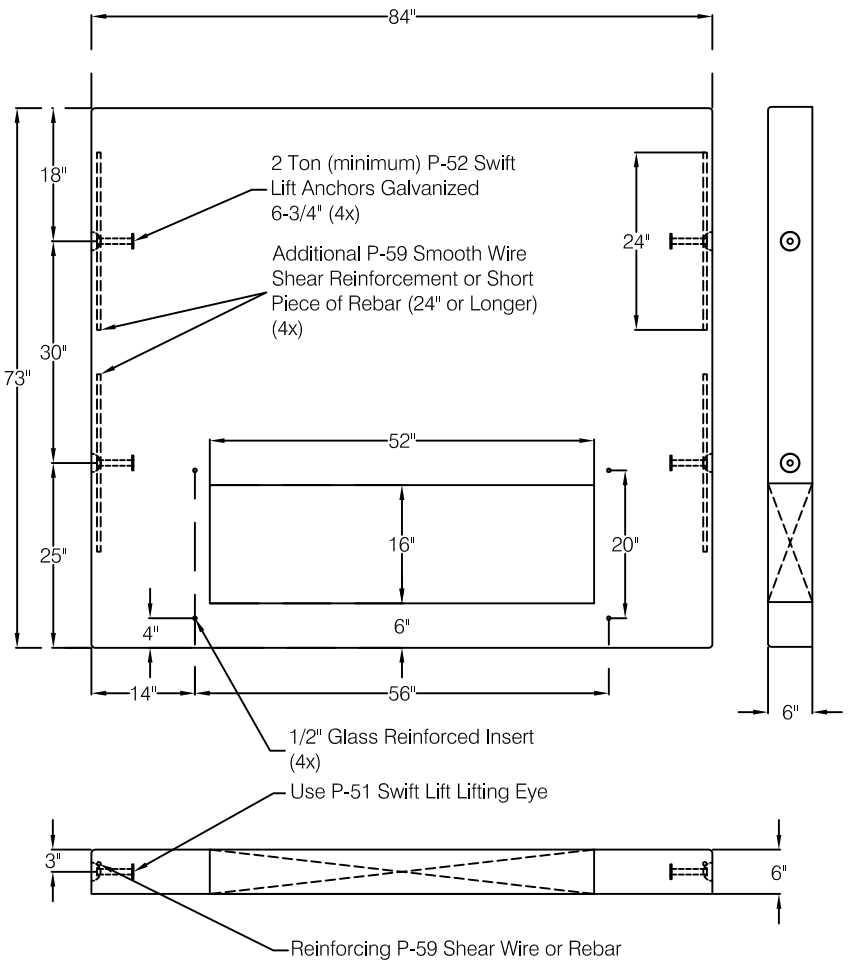

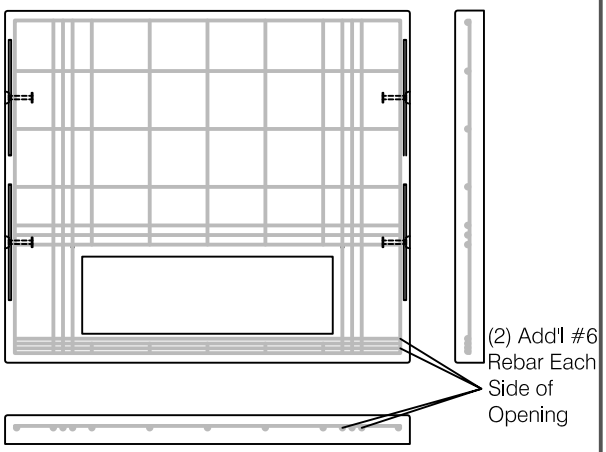

#6 Rebar 12" O.C.E.W. Centered in Pad (Showing General Layout)

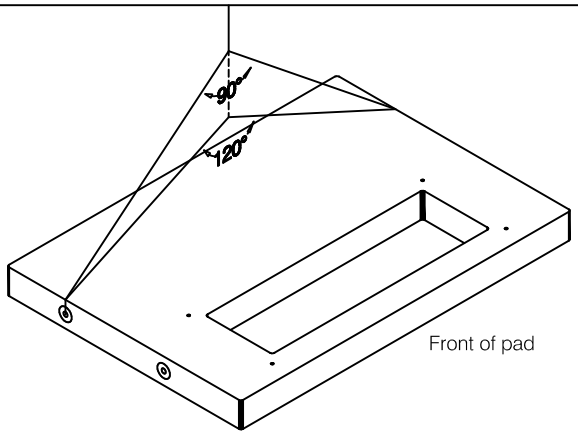

Pulling Angles to Remain Within Range of 90°-120° as Shown
When lifting, personnel shall always utilize all four (4) lifting eyes

MATERIAL REQUIREMENTS

- Dimensions Shall be 84"x73"x6"
- Concrete shall have a minimum fire rating of 3 Hours as well as moderate to exceptional sulfate resistance
- Type III Concrete with 3/4" aggregate and minimum compressive strength of 4,500 psi
- Reinforcing #6 rebar steel shall have a minimum steel strength of 60,000 psi (Grade 60)
- To assure proper quality control and supervision, concrete pads shall be produced at a National Precast Concrete Association (NPCA) certified manufacturing plant. The manufacturer shall comply with the requirements set by the NPCA's Quality Control Manual for Precast Concrete Plants.

INSTALLATION & CONSTRUCTION REQUIREMENTS

Space requirements for transformer pads will generaly be 9' x 12'. Factors to be considered in locating the pad include the following.

- ACCESSIBILITY - The transformer pad shall be accessible to line boom trucks equipped for the installation and removal of heavy transformers. Such accessibility shall not require intrusion on adjacent property.

- PROXIMITY OF BUILDINGS, WALLS, BARRIERS, AND/OR OVERHANGS - In addition to the clearances required for installation and removal of transformers, the minimum clearance in front of the transformer pad shall be eight (8) feet and the minimum clearance from all other sides shall be three (3) feet for 750 kVA transformers and four (4) feet for 1000 kVA transformers. If the building has an overhang, clearance to the edge of the transformer pad shall be measured horizontally from the outer edge of the overhang.

- CODES AND STANDARDS - In addition to the above, the installation shall conform to the current National Electric Code (NEC) as well as current federal, state, and local standards as outlined in Fort Collins' Electric Construction Policies, Practices, and Procedures (ECPPP).

City of Fort Collins Light & Power	Material Specification
Date: 07/25/2013	**Rev No:** 004
Drawn By: J Spaulding	**Appr By:** K Bader
Precast Three ϕ Transformer Pad Design: 750-1000 kVA	
Specification No: 368-400	**Serial No:** 02